theLuxa P300 KNX BK

Item no.: 1019611

Home and Building control
KNX

Description

- Motion detector (PIR)
- Automatic lighting control based on presence and brightness
- For integration into KNX building systems
- For outdoor use
- For installation on walls and ceilings
- Integrated temperature sensor
- For larger, commercial outdoors properties such as offices, public buildings, hotels, schools, car parks and warehouses
- Easy to program with KNX ETS software
- Adjustable brightness switching value and switch-off delay
- Sensitivity can be reduced
- Area limit via lens attachment
- Mixed light measurement
- Teach-in of current brightness value possible
- Pulse function
- Test function for checking detection area
- Installation on flush-mounted socket possible (60 mm)
- Single-handed plug-in installation
- Instant start-up possible via factory preset
- Controls are place protected
- Corner angle included
- Spacer and corner angle included

Technical data

	theLuxa P300 KNX BK
Measuring range brightness	1 – 3000 lx
Detection angle	300°
Creep under protection	Ø 6 m
Installation type	Wall and ceiling installation
Light switch-off delay	1 s - 60 min
Lamps	fluorescent lamps, Incandescent/ halogen lamps, Energy saving lamps, LEDs

	theLuxa P300 KNX BK
Light measurement	Mixed light measurement
Ambient temperature	-25°C ... 45°C
Colour	Black
Protection class	III
Type of protection	IP 55

Connection example

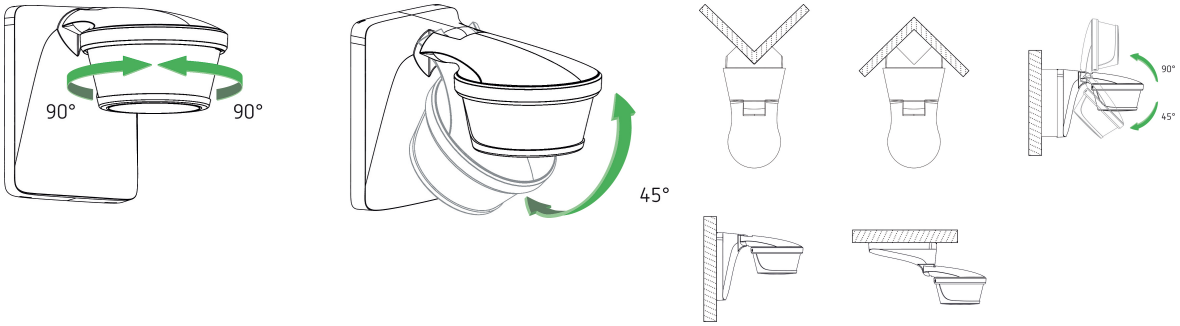

Detection range for planning applications at a temperature of 21 °C

Mounting height (A)	Diagonally (t)	Head on to (R)
2 m	12 m	4 m
2.5 m	16 m	5 m
3 m	16 m	5 m
3.5 m	16 m	5 m
4 m	12 m	4 m

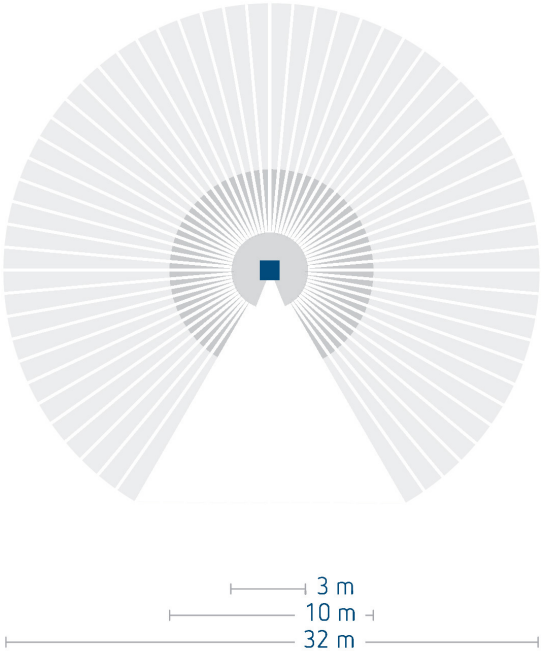

theLuxa P300 KNX BK

Item no.: 1019611

Scale drawings

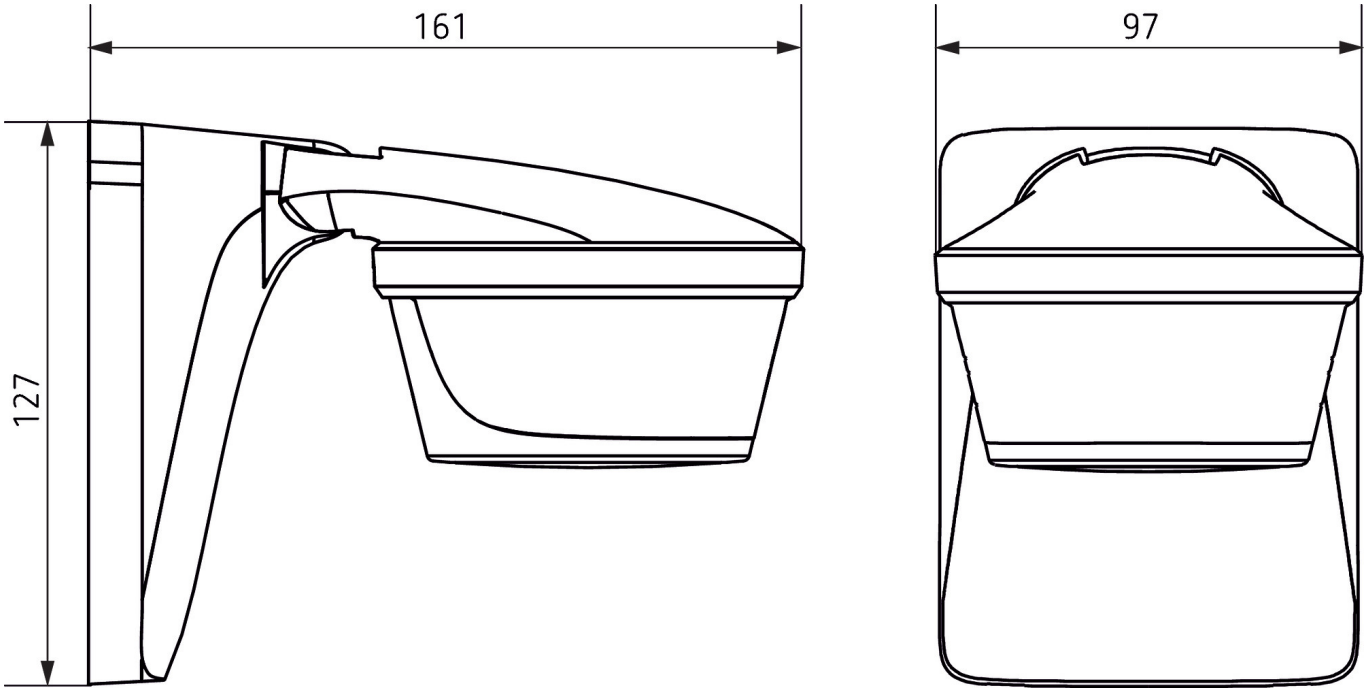

Accessories

theSenda P
Item no.: 9070910

theSenda S
Item no.: 9070911

Corner angle theLuxa P BK
Item no.: 9070905
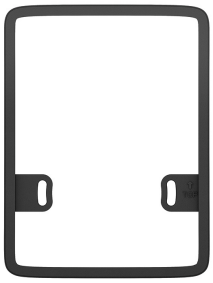
Spacer theLuxa P BK
Item no.: 9070909