Installers & User guide **Retrofit Lock.**

igloohome

Version 0.1 07/22 OE1

Hi there!

We're so glad you've decided to join us on this journey to create a world without keys. You're officially an igloohomie!

In this guide, you'll find everything you need to get started with your lock. We hope that we've been as comprehensive and informative as possible. Afterall, we're here to make life easier for you (at least when it comes to your home's access).

If you do not find what you're looking for, we're working on updating it. Or... you could reach out to us at support@igloohome.co because we love interacting with you! Speaking of interaction, let's stay connected regardless. Why don't you join the community of igloohomies worldwide?

Follow us on Facebook

Watch us on YouTube

Or stalk us on Instagram

Maybe network with us on LinkedIn

We're always updating our guides because we want to keep things fresh! You can visit igloohome.co/support periodically to view the latest version, unless, this is the latest version. Hello you, igloohomie from the future, wow!

Table of Contents

What's Included 4

Specifications 5

Lock Anatomy 6

Installation Guide
- Requirements 7
- Preparing for Installations 10
- Installation Instructions
  - Retrofit Extender 11
  - Key Installation 13
  - Thumbturn Installation 15
  - Parralel Door Sensor Position 19
  - Perpendicular Door Sensor Position 21
- Calibrating your Lock 23
- Testing Lock Functionalities 27

User Guide
- Features 28
- Mode of Access 30
- App Onboarding 35
- Managing Access via the app 37
- Manage Ecosystem Products via the app 38
- Changing Batteries 40
- Connect with Airbnb 42
- Audio and LED Indications 43

Troubleshoot 44

Compliance 45

What’s Included

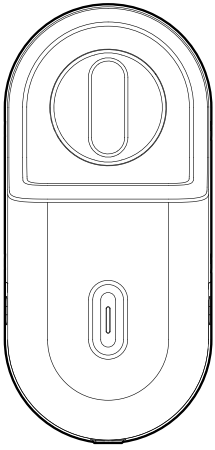

Retrofit Lock

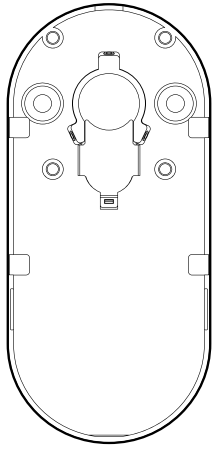

Mounting Plate

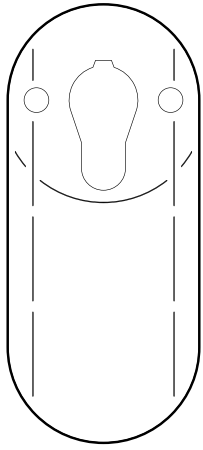

Double Sided Tape

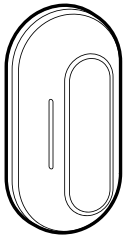

Door Sensor

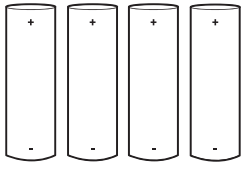

AA Alkaline Batteries x4

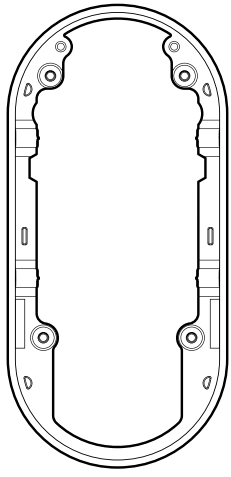

Retrofit Extender

Allen Key

5mm (0.20”) Bolt Screw x4

Specifications

Model	OE1
Weight	Net: 0.4kg, Gross: 0.5kg
Material	ABS, PC
Modes of Access (Entry)	Bluetooth keys, Existing keys, PIN codes (via Keypad accessory)
Modes of Access (Exit)	Multi-Function Button, Thumbturn, Bluetooth keys
Power Type	4 AA alkaline batteries
Battery Life	Up to 12 months
Emergency Power	9V Alkaline Battery
Battery Operating Temp.	-10°C to 50°C / 14°F to 122°F
Operation Temp.	-20°C to 50°C / -4°F to 122°F
Certifications	CE, UKCA, FCC, RoHS2
Protocols	Bluetooth 5.0, algoPIN™ technology
Usage	Advised to be installed under sheltered areas, not to be exposed to wet weather conditions.

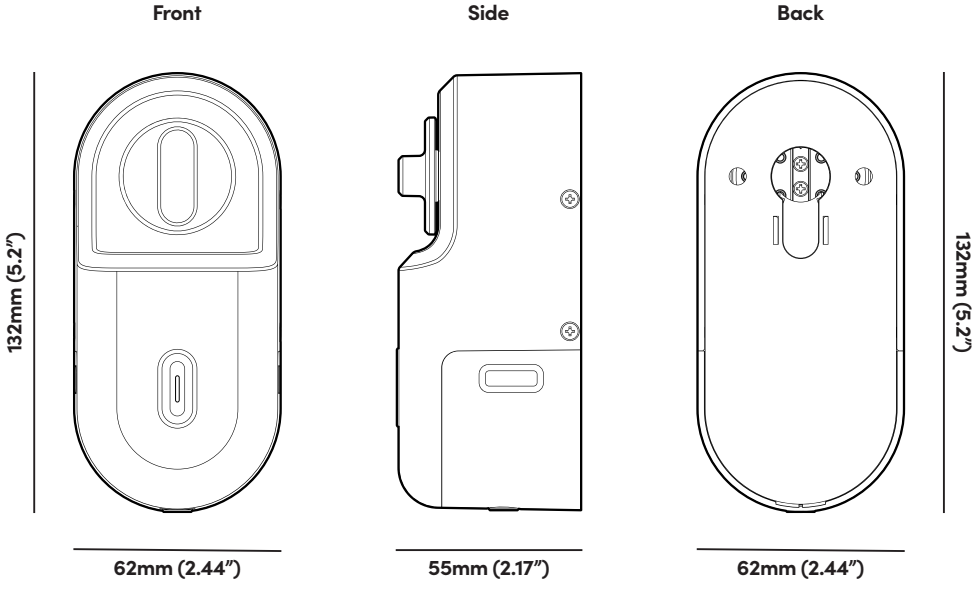

* **DO NOT USE:** Heavy Duty, Eveready, GP, or rechargeable batteries. Duracell, Energizer and Panasonic alkaline batteries recommended. Please note that using better batteries will improve the performance and lifespan of the lock.

User Guide

Lock Anatomy

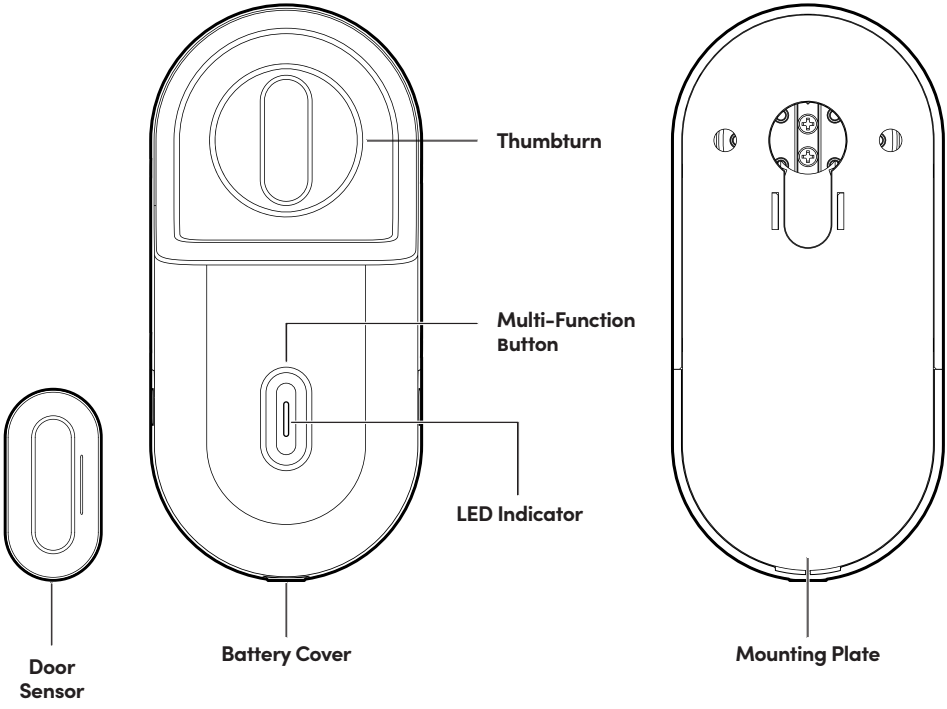

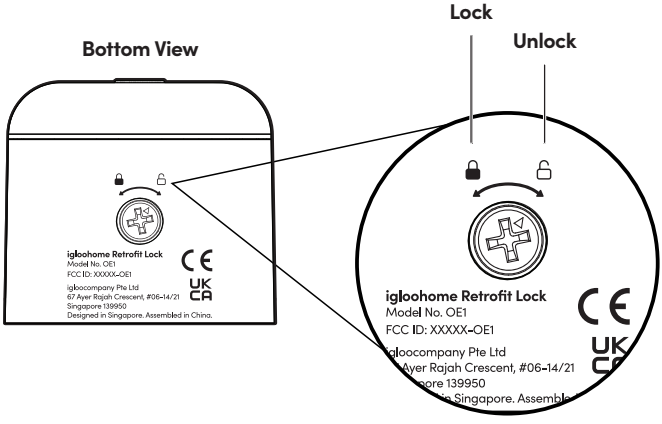

Installation Guide

Requirements for Door/Key/Cylinder/Cassette

Doors

Door opens inwards when you leave the house.

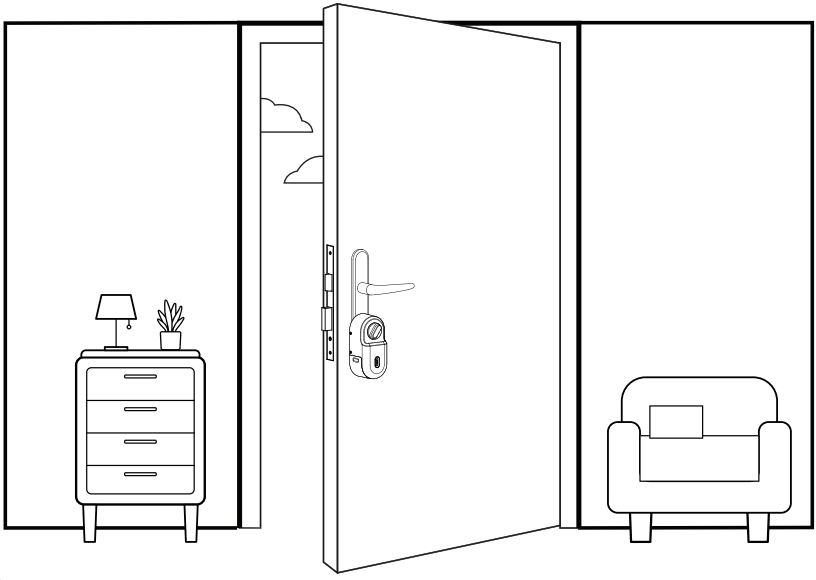

Keys

1. Thickness of key: <5mm
2. Key head Width: <39mm
3. Key head Depth: 38mm

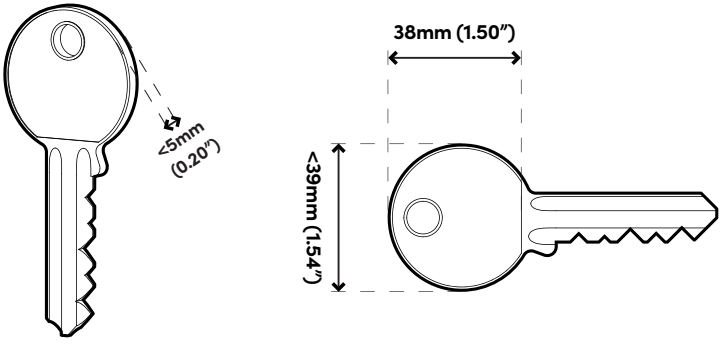

* **NOTE:** For keys depth above 33mm please use the retrofit extender accessory, refer to page 11 for the installation of the retrofit extender.

Thumbturns

1. Thumbturn Thickness: Up to 20 - 36mm
2. Thumbturn Width: Up to 30mm
3. Thumbturn Depth: Up to 29mm

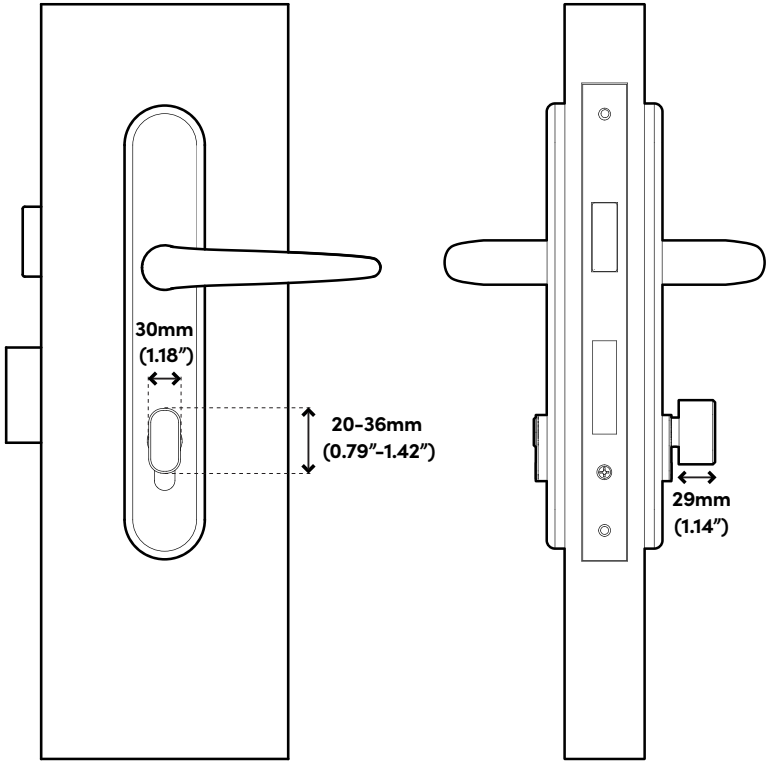

* **NOTE:** For thumbturns depths above 24mm, please use the retrofit extender accessory, refer to page 11 for the installation of the retrofit extender.

Cylinder

1. The Retrofit Lock will only work with euro profiled cylinder
2. Cylinder should protrude 4mm for stable use, else user will have to use the 3M adhesive tape provided to secure the lock

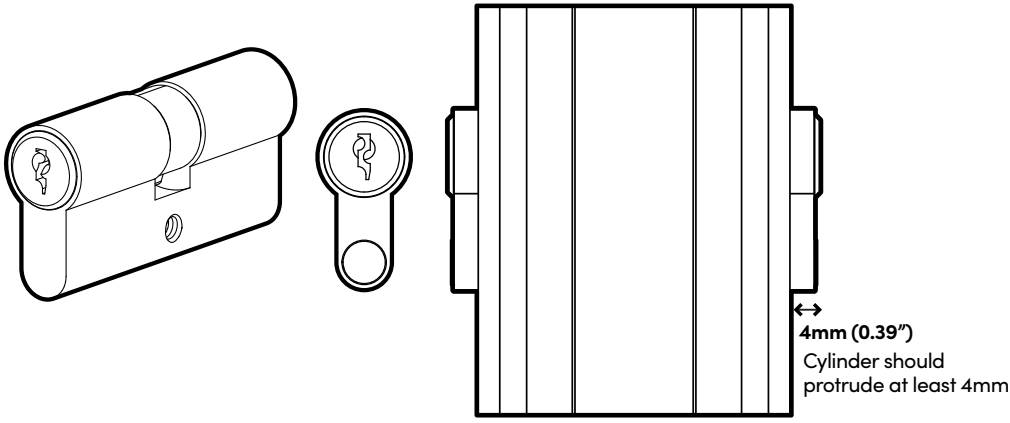

Cassette

Cassette with backset greater than 35mm

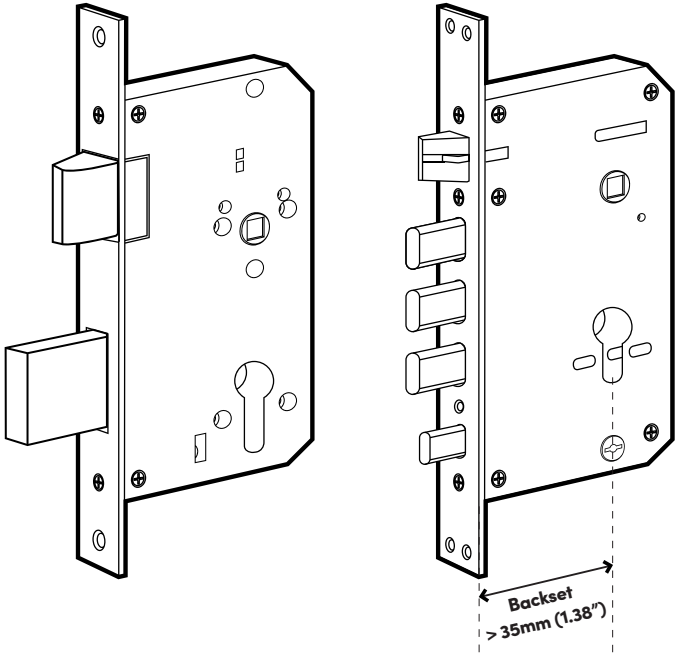

Preparing for Installation

Items needed:

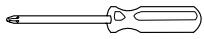

#2 Phillips Screwdriver
Not provided

Allen key

Indoor Use

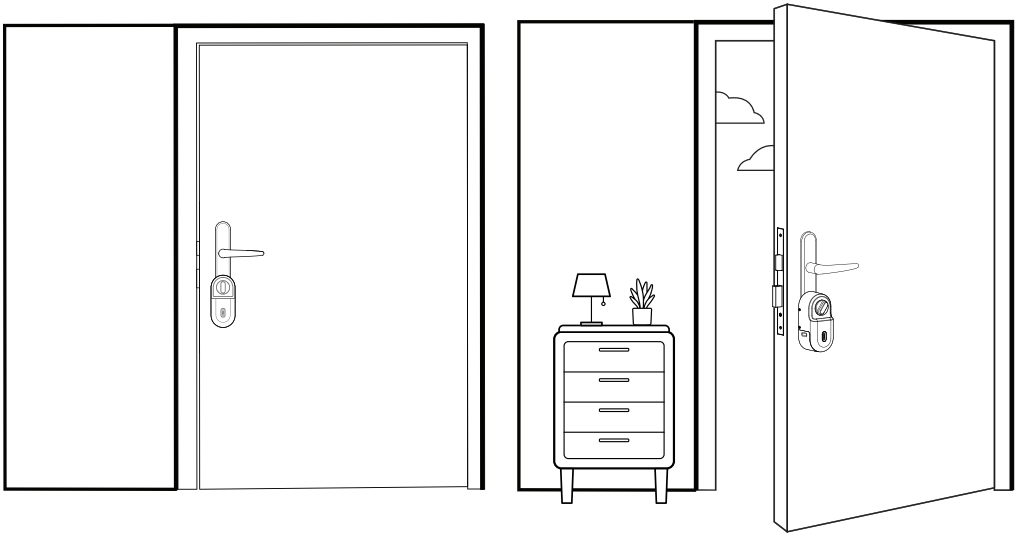

⚠ *Note: The Retrofit Lock is not designed for outdoor use.*

Installation Instructions

Retrofit Extender

1a **Ensure your key fits these dimensions. Otherwise, use the Retrofit Extender during installation.**

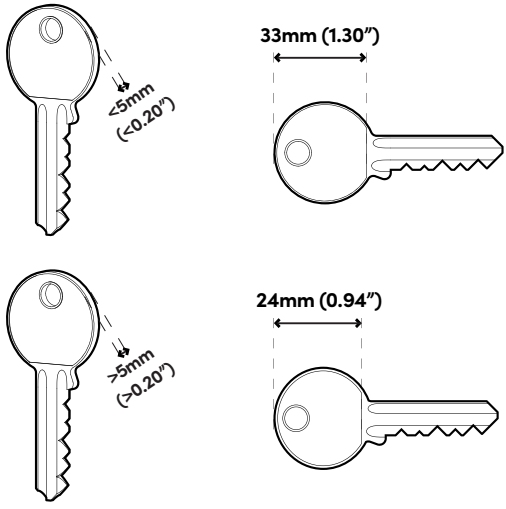

1b **Place the Retrofit Extender onto the mounting plate and secure it with four screws.**

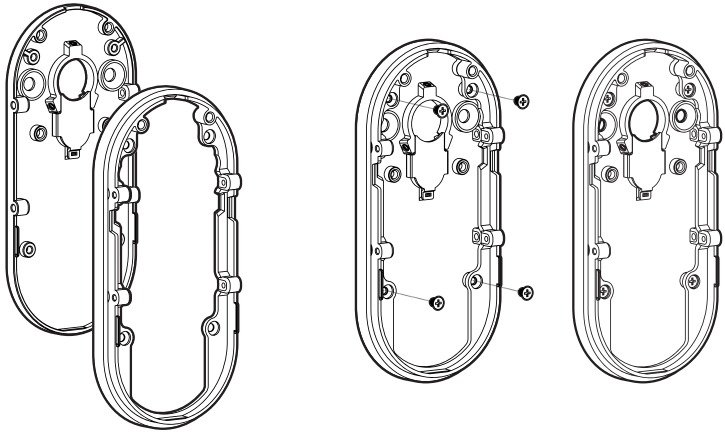

1c **Peel off the backing of the adhesive found on the back of the mounting plate. Place it onto the lock cylinder.**

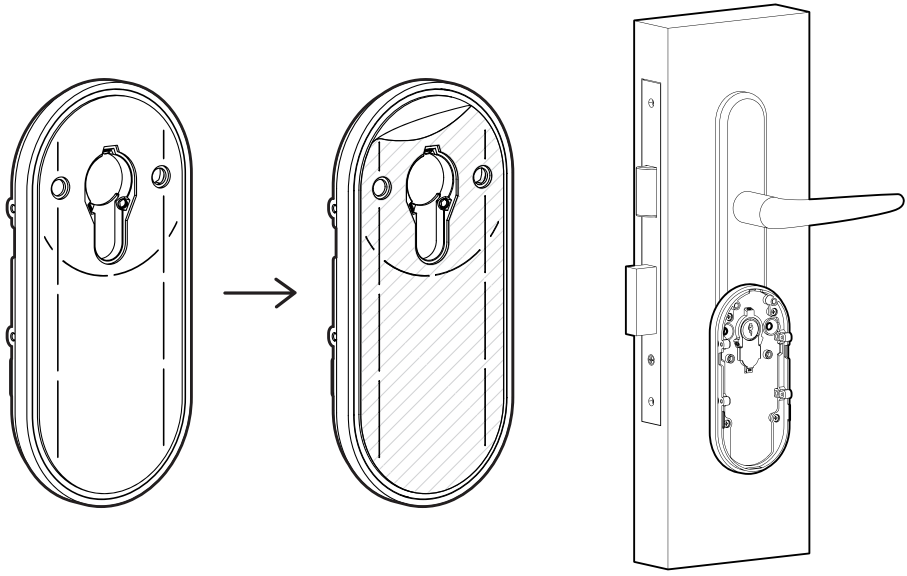

Key Installation

1a **Remove key from cylinder.**

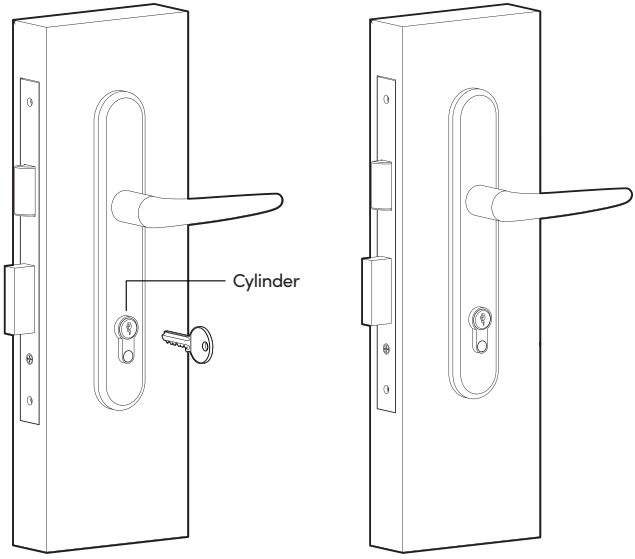

1b **Place mounting plate onto lock cylinder and secure it with the Allen key provided.**

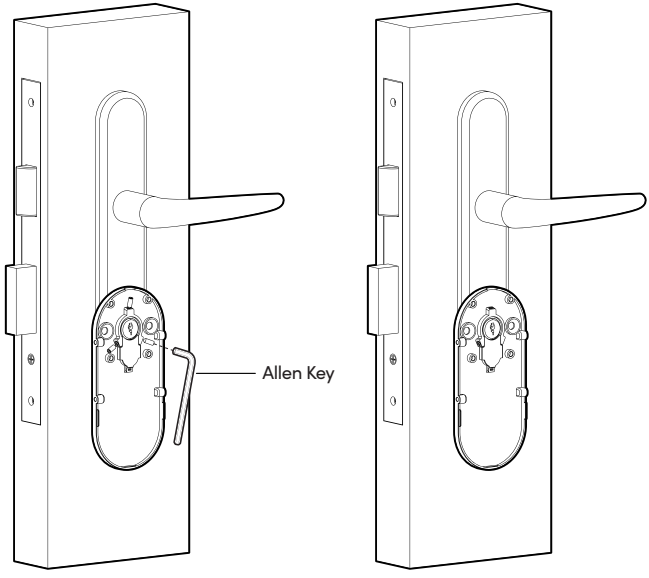

1c **Re-insert key into the lock cylinder. After which, please refer to 4a and 4b to complete the installation.**

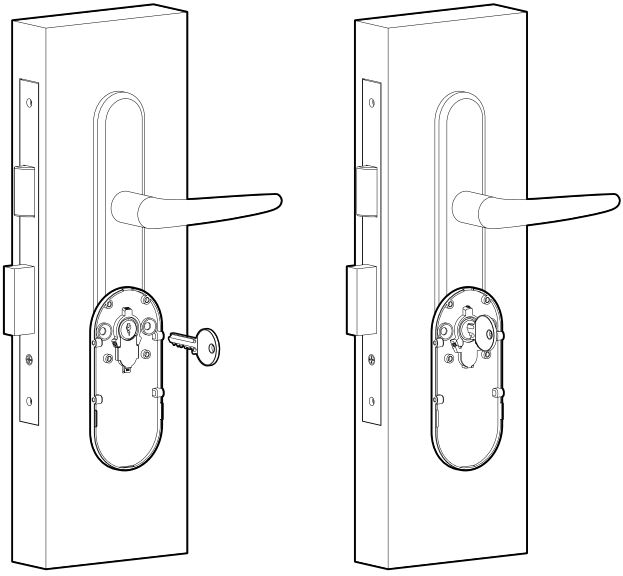

Installation Instructions

Thumbturn Installation

3a **Remove screw from the lock cassette and remove the cylinder.**

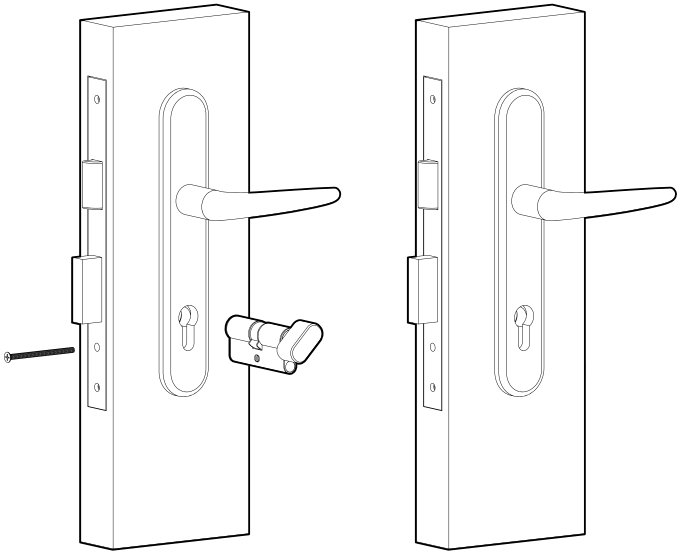

3b **Remove the cylinder plate from the mounting plate.**

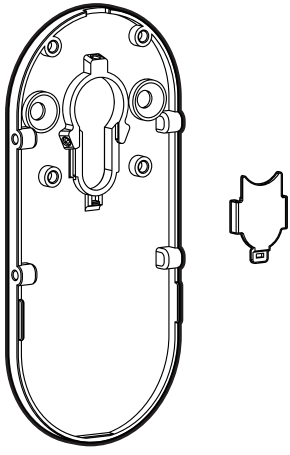

3c **Install the cylinder from the front of the mounting plate.**

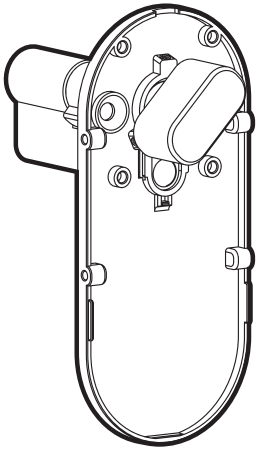

3d **Place the cylinder plate back onto the mounting plate. Secure the mounting plate to the cylinder with the 3 screws.**

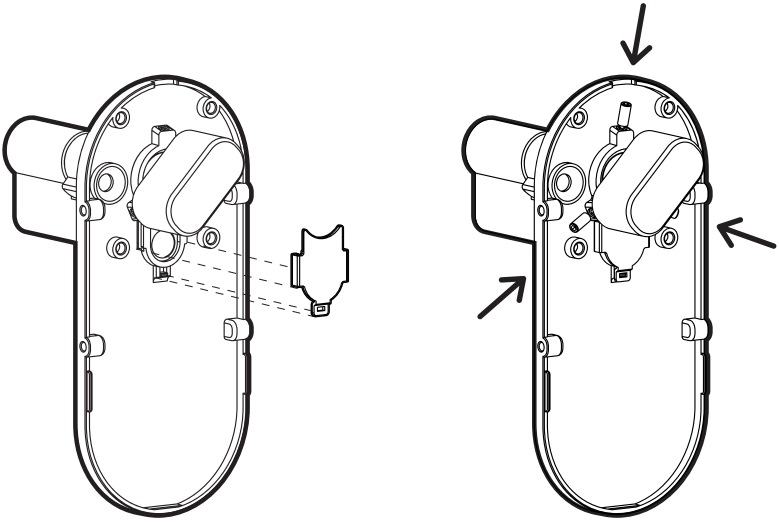

3e **Re-install the cylinder and secure it with the screw from the lock cassette. After which, please refer to 4a and 4b to complete the installation.**

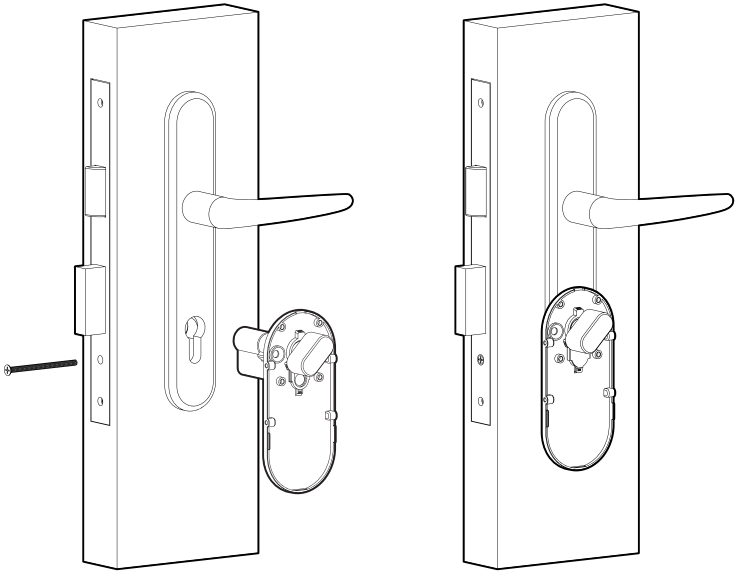

⚠ **CAUTION:**
When installing the back body, ensure that the key or thumbturn is in a vertical orientation.

4a Install the lock body onto the mounting plate and secure the sides with 4 M3 screws.

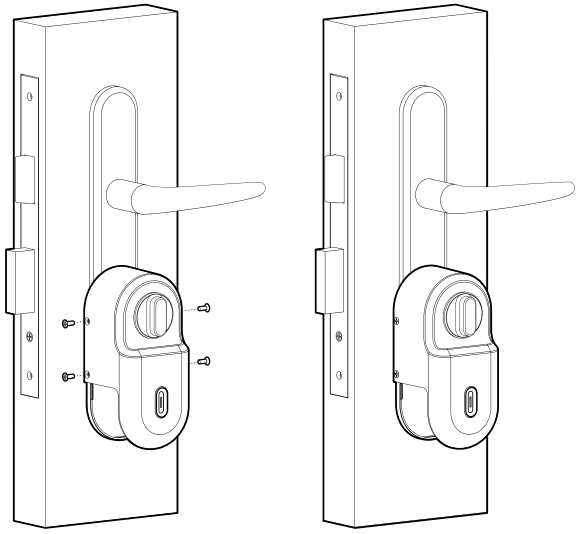

Screws

B 5mm (0.20")

CAUTION:
When installing the back body, ensure that the key or thumbturn is in a vertical orientation.

4b Install the battery cover and turn the screw to the 🔒 position.

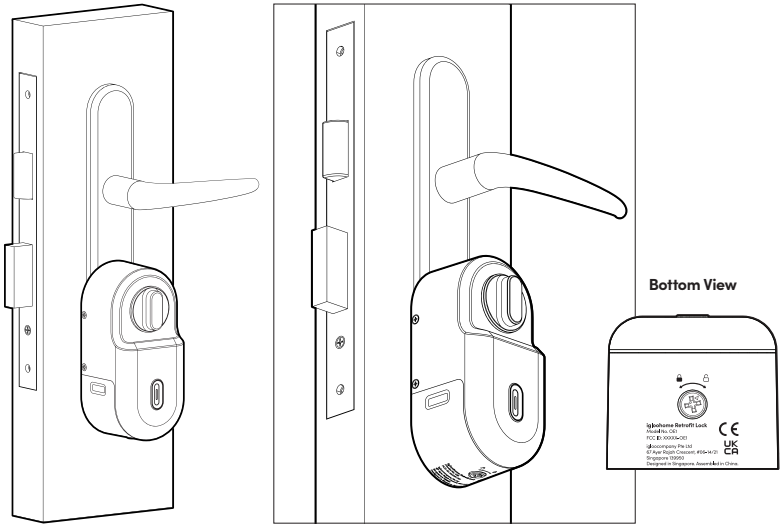

Installation Instructions

Parallel Door Sensor Position

1 **Use a wet wipe or cloth to wipe the area of the door frame where the door sensor will be installed on.**

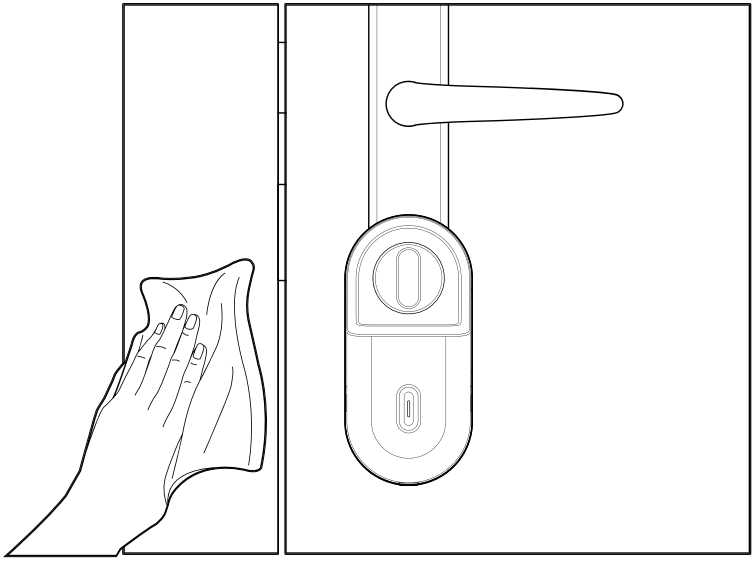

2 **Peel off the backing of the adhesive on the back of the door sensor.**

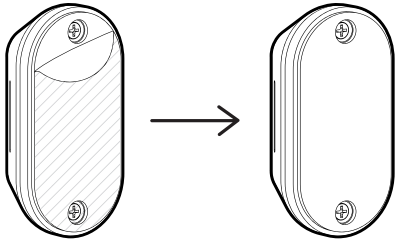

3 **Press the door sensor firmly on the clean surface of the door frame. Ensure area is even when mounting the door sensor. t**

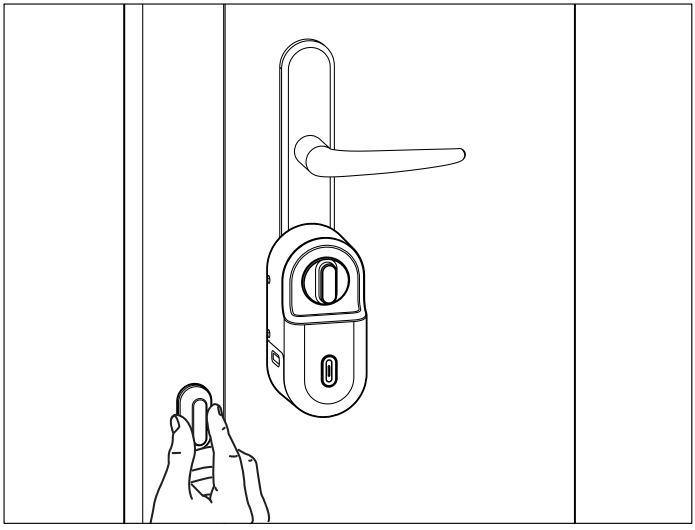

4 **The maximum distance for detection from the center of the Multi-Function button to the center of the door sensor should be 90mm.**

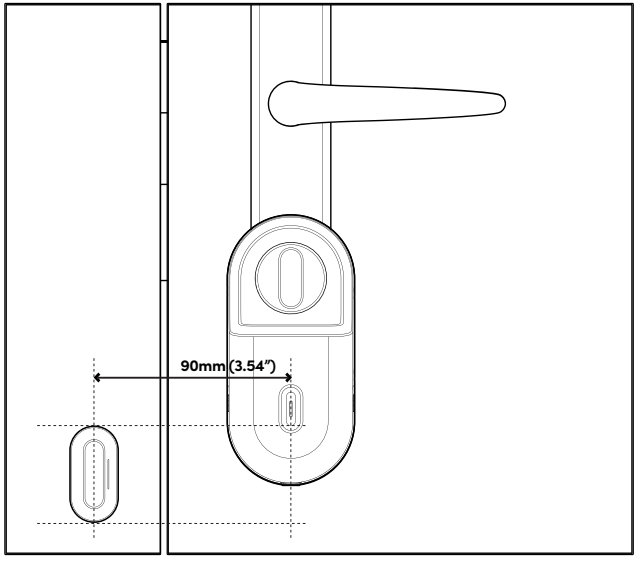

Installation Instructions

Perpendicular Door Sensor Position

1 **If the door frame's depth is >50mm, it is advised to install the door sensor perpendicular to the lock.**

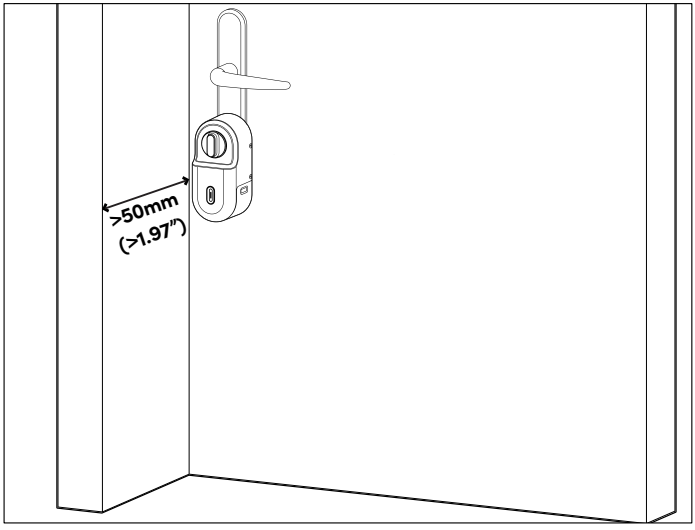

2 **Unscrew the two screws on the back of the door sensor to remove the casing.**

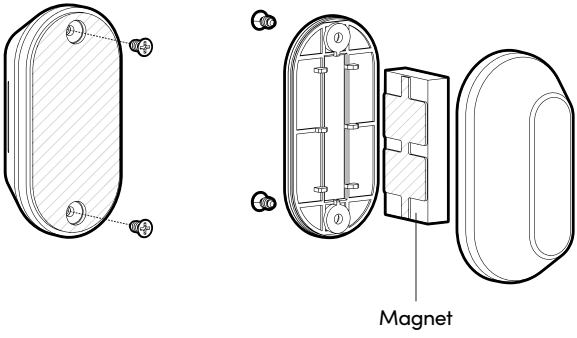

4a **Press the door sensor firmly on the clean surface of the door frame. Ensure area is even when mounting the door sensor.**

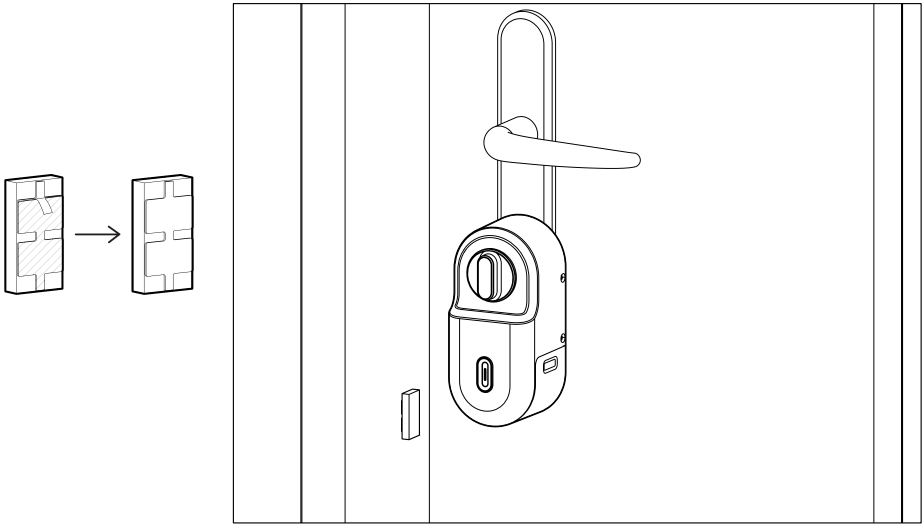

Calibrating your Lock

Please install the igloohome app and create an account before setting up your lock for use. More details can be found on page 32.

a **Ensure door sensor is properly installed and tap <Next>.**

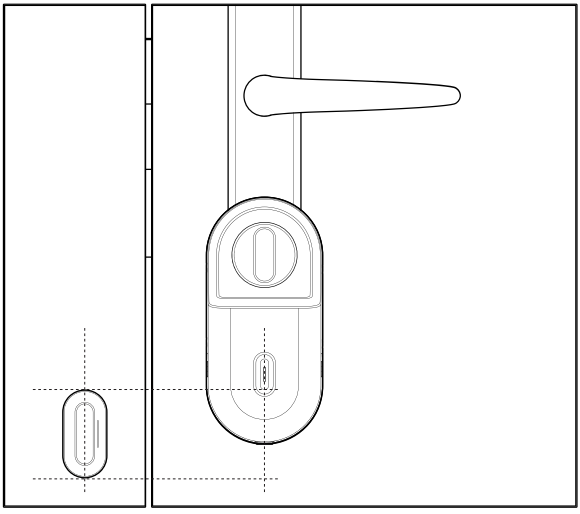

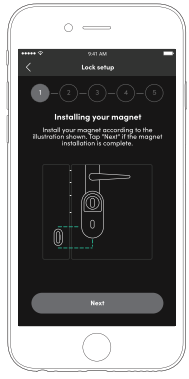

b **The lock will check your battery level to ensure an optimal calibration experience.**

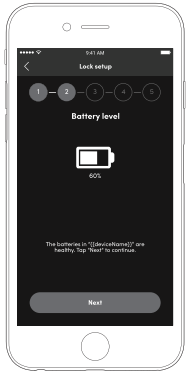

c **Turn the thumbturn to unlock, ensure it has been turned to its maximum position.**

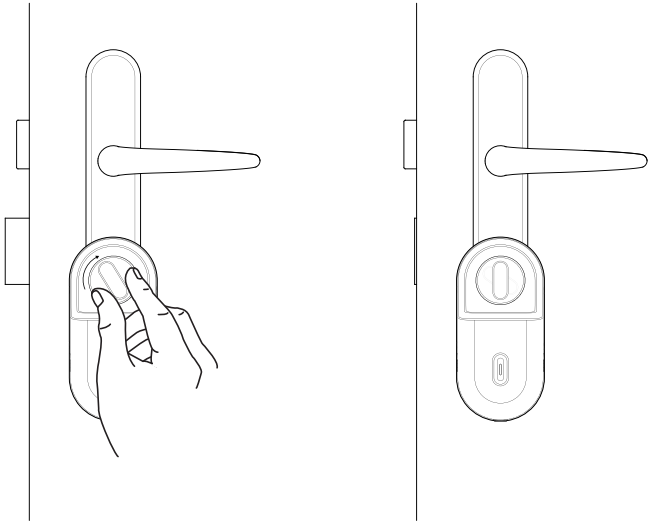

d **Keep the door slightly ajar, ensure the latch bolt is leaning against the door. An audio indicator will notify you to proceed to the next step. Tap <Next> to proceed.**

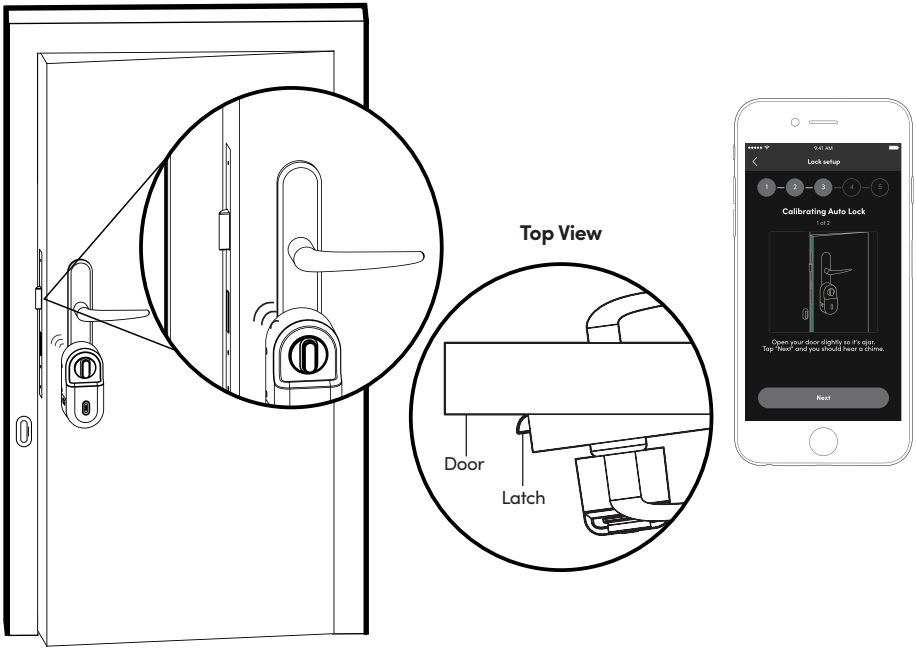

e **Close the door fully while keeping it unlocked. An audio indicator will notify you to proceed to the next step. Tap <Next> to proceed.t**

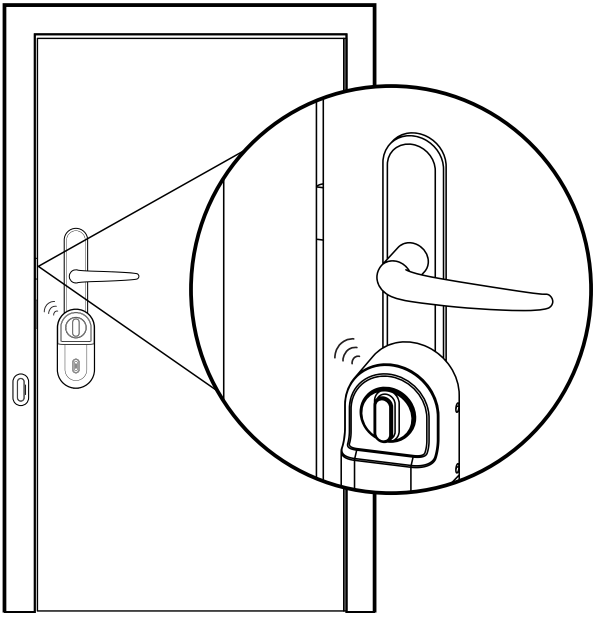

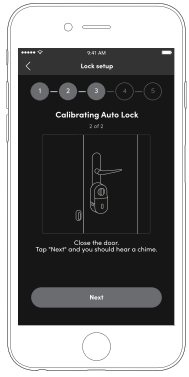

f **The lock will automatically calibrate itself for your door. An audio alert and LED indicator showing green will notify you that the process is complete.**

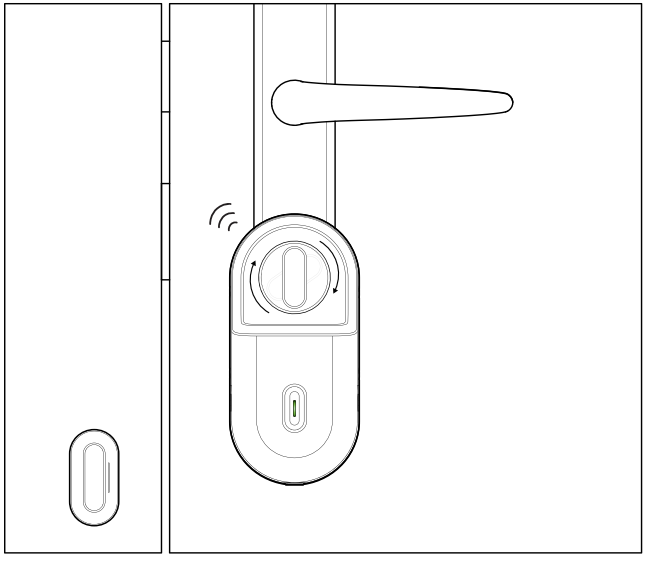

g **If you have a handle on the door's exterior, select the option.**

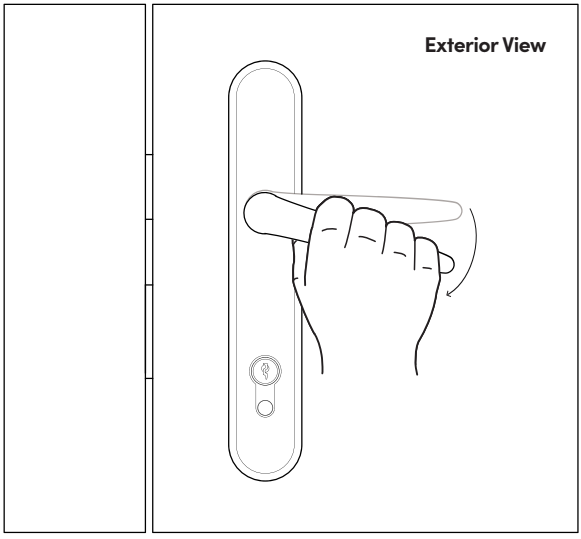

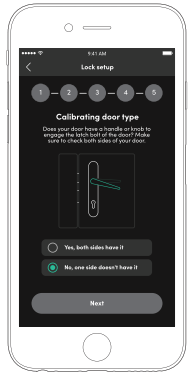

h **Congratulations, you have completed the calibration!**

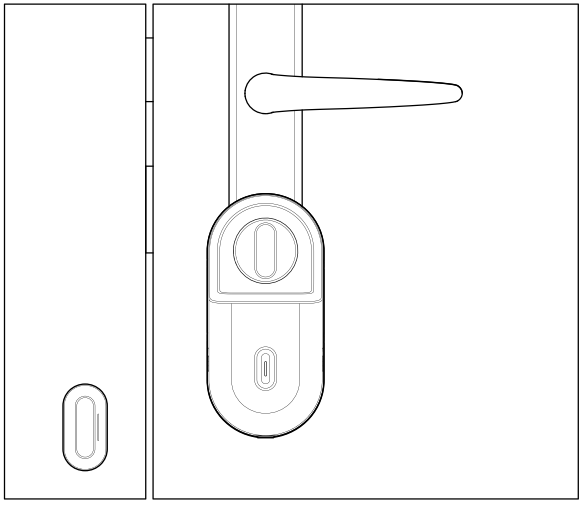

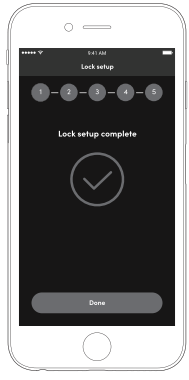

**Note: You may perform the calibration again from the Settings tab in the igloohome app.*
**It is recommended that calibration be done every 9 months.*

Testing Lock Functionalities

a **Manual Relock and Unlock**

Manually rotate the thumbturn of the Retrofit Lock. The movement should feel smooth.

b **Bluetooth Unlock and Auto Lock**

1. Ensure Retrofit Lock is in a locked state.
2. On the igloohome app, tap the lock icon.
3. LED indicator will flash blue, followed by green, with an audio indicator to notify you that the door is unlocked.
4. The lock's bolt tongue should automatically extend when the door is completely closed.

Features

Bluetooth Key

Master Bluetooth Key

Unlocks via Bluetooth through the app.

Guest Bluetooth Key

Time-sensitive Bluetooth keys can be generated and shared with guests.

Lock

Auto Lock

Automatically locks when door is closed. Users can configure the delay or deactivate this. Function will only work when door sensor is installed.

Auto Unlock

Automatically unlock your door when the lock senses your app within the set Bluetooth range.

Manual Relock

Rotate the thumbturn or press the multi-function button to extend the bolt tongue.

Battery

Low Battery Alert

An intuitive audio and LED alert prompts you to change batteries when levels run low. tt

Features

Security / Alarms

Obstruction Alarm

The lock will sound an alarm if the bolt tongue cannot be extended or retracted fully to alert the user of any obstructions.

Activity Logs

Bluetooth key activity logs are updated in real-time. PIN code activities (only via the Keypad) will be updated when owner syncs lock to app via Bluetooth.

Night Mode

Automatically lock your door at a set time during the night for heightened security.

Schedulest

Schedule the lock to disable the Auto Lock function for easier access throughout the day.

High Torque Mode

Available for locks that require more power to extend and retract the bolt tongue smoothly.

Others

Volume Control

Volume is adjustable to your preference. Select from 0 (mute) to 5 (loudest).

Modes of Access

Modes of access (Entry)	Bluetooth keys, existing keys, PIN codes (via Keypad accessory)
Modes of access (Exit)	Bluetooth keys, Thumbturn, Multi-Function Button

a Bluetooth

This mode requires you to have the igloohome app installed on your mobile phone with a verified account. You can be the owner of the lock of be a recipient of a Guest Bluetooth Key to use this.

1. On the app, select the lock you're trying to access.
2. Tap the 🔒 on the screen.
3. The LED indicator on the lock will flash blue to establish the Bluetooth connection, then green when it is successfully unlocked. You will also hear four ascending tones.

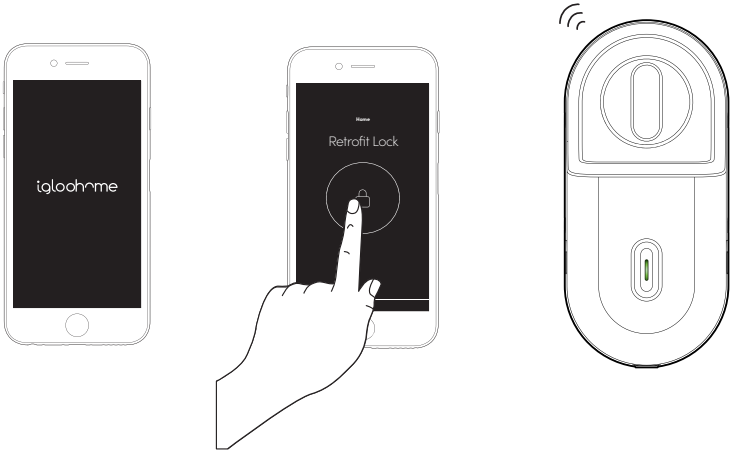

Note: You need to be within Bluetooth range of the lock, and have your Bluetooth services switched on.

b Thumbturn

Rotate the thumbturn to manually unlock the door from the inside.

Left-hand Installation

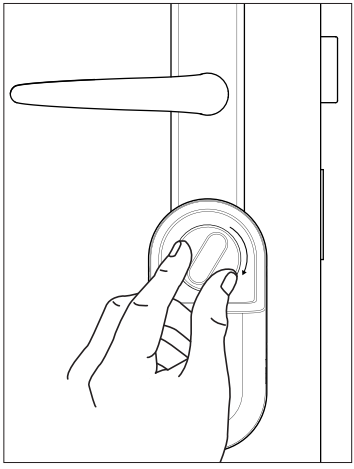

Right-hand Installation

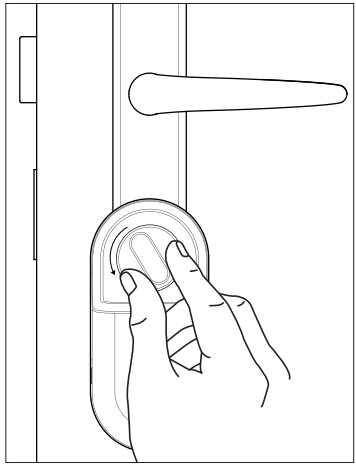

c Multi-Function Button

1. Press the Multi-Function button to unlock
2. The LED Indicator will flash green twice with 4 short ascending tones once unlocked.

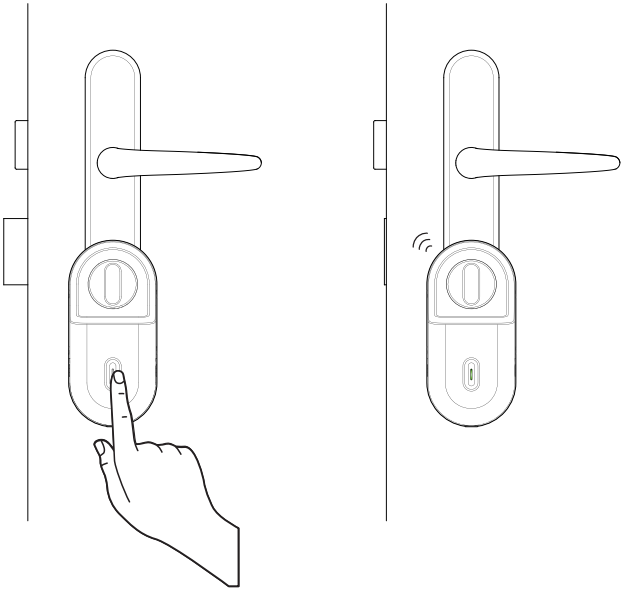

App Onboarding

1 Download the igloohome app

The mobile app is available for free on the App Store and Google Play Store!

App Store **Google Play**

2 Register for an igloohome account

1) Launch the igloohome app and tap **[Create new account]**
2) Fill in the fields shown on the screen.
3) Accept the terms of services and privacy policy.
4) Tap **[Create account]**.
5) Enter the 6-digit OTP sent to your email address.
6) Tap **[Verify]**.
7) You now have a verified igloohome account!

If you have forgotten your password,

1) Visit the login page and select **[Forgot password?]**
2) Enter your registered email address.
3) Press **[Submit]**.

You will receive an email with a link and instructions on how to reset your password.

3 Pair the lock to your account

If you're completely new to igloohome:
Test the lock with the Factory PIN code before you begin the pairing process.

a) Create a property to associate your lock with.

1. Tap on ≡ and select **[Add and manage].**
2. Tap on **[Manage Properties].**
3. Tap the **[+]** icon.
4. Input the name and region of the property, and tap **[Submit]**.

b) Pair the lock to your account.

1. Tap on ≡ and select **[Add and manage].**
2. Tap on the **[<]** icon.
3. Tap on **[Add Lock].**
4. Select the property you created.
5. Follow the instructions on the screen.

If you're pairing the lock to an existing igloohome account:

1. Tap on ≡ and select **[Add and manage].**
2. Tap on **[Add Lock].**
3. Select the property.
4. Follow the instructions on the screen.

Managing Access via the app

1 Create Guest Bluetooth Keys

Allow guests and family members to use their smartphones to unlock the door. When you issue a Bluetooth key, you get real-time updates on who has accessed your property.

1. On the igloohome mobile app, tap on the ⊲ .
2. Tap on **[+Access].**
3. Select **[Bluetooth Key].**
4. Fill in the required fields.
5. Tap on **[Create Bluetooth Key].**
6. Tap on **[Share].**

Your guest can either scan the unique QR code shown on your screen, or you may share the link via your preferred communication method (Text, Email, WhatsApp, Facebook Messenger etc.) to claim the Bluetooth key.

Your guest will either need to download the igloohome mobile app and register for an account or claim the Bluetooth key with their existing igloohome account.

Important:

All Bluetooth keys must be claimed **within 1 hour** of it being generated. If they are unclaimed within the period, the keys will be considered invalid.
I.e. Generated at 1900hrs today, must be claimed by guest by 2000hrs today.

Bluetooth keys can be revoked by lock owner anytime.

Manage Ecosystem Products via the app

1 Keypad

a) Pair the Keypad to your account

Before linking the Keypad to a lock, you need to add the device to your account:
***Please ensure you are within Bluetooth range of the Keypad and your Bluetooth function is turned on.**

1. Tap on ☰ and select **[Add and manage].**
2. Select **[Manage Keypads].**
3. Tap the **[+]** icon located on the top right of the screen, or tap the **[Add Keypad]** button located on the bottom of the screen.
4. Follow the instructions on the screen.

b) Link the Keypad to a lock

***Please ensure you are within Bluetooth range of the lock and Keypad and your Bluetooth function is turned on.**

1. Tap on ☰ and select **[Add and manage].**
2. Select **[Manage Keypads].**
3. Select the Keypad you want to link.
4. Follow the instructions on the screen.

View the full Keypad User Guide

2 Key Fob

a) Pair the Key Fob to your account

Before linking the Key Fob to a lock, you need to add the device to your account:
***Please ensure you are within Bluetooth range of the Key Fob and your Bluetooth function is turned on.**

1. Tap on ☰ and select **[Add and manage].**
2. Select **[Manage Key Fobs].**
3. Tap the **[+]** icon located on the top right of the screen, or tap the **[Add Key Fob]** button located on the bottom of the screen.
4. Follow the instructions on the screen.

b) Link the Key Fob to a lock

***Please ensure you are within Bluetooth range of the lock and Key Fob and your Bluetooth function is turned on.**

1. Tap on ☰ and select **[Add and manage].**
2. Select **[Manage Key Fobs].**
3. Select the Key Fob you want to link.
4. Follow the instructions on the screen.

View the full Key Fob User Guide

3 Bridge

a) Link the Bridge to a lock or other ecosystem products

1. Tap on ☰ and select **[Add and manage].**
2. Tap **[Bridges].**
3. Select the Bridge you want to link your lock to.
4. Tap **[Linked locks and devices].**
5. Tap the **[+]** icon located on the top right of the screen.
6. Follow the instructions on the screen.

b) Unlink the Bridge from a lock or other ecosystem products

1. Tap on ☰ and select **[Add and manage].**
2. Tap **[Bridges].**
3. Select the Bridge you want to unlink from.
4. Tap **[Linked locks and devices].**
5. Tap 🔗 next to the selected lock or ecosystem product you want unlinked.

View the full Bridge User Guide.

Night Mode

Automatically lock your door at a set time during the night for heightened security.

Activate Night Mode:

1. In the lock settings page tap **[Night Mode].**
2. Toggle the slider to ON.
3. Set the start and end times to set the duration for when Night Mode is activated.
4. Tap [**Apply]** to save the settings.

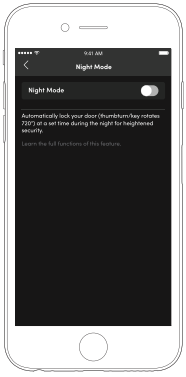

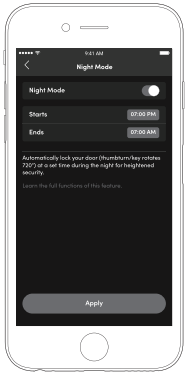

Schedules

Schedule the lock to disable the Auto Lock function for easier access throughout the day.

Activate Schedules:

1. In the lock settings page tap **[Schedules].**
2. Toggle the slider to ON.
3. Set the start and end times for Schedules to be activated. The activation period is set for all days of the week by default. Select the day of the week to turn Schedules on or off for that particular day.
7. Tap **[Apply]**.

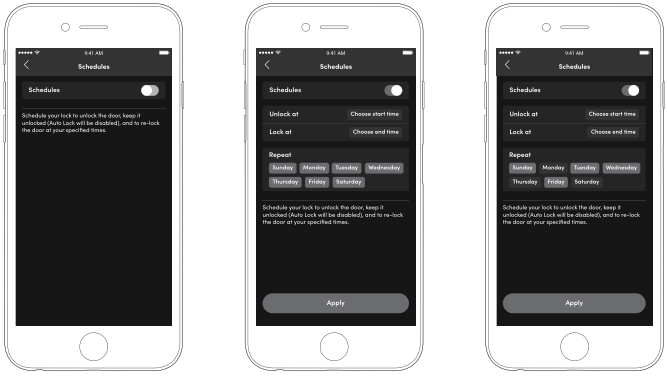

High Torque Mode

The High Torque Mode is available for locks that require more power to extend and retract the bolt tongue smoothly.

Activate High Torque Mode:

1. In the lock settings page tap **[High Torque Mode].**
2. Toggle the slider to ON.
3. Tap [**Apply**].

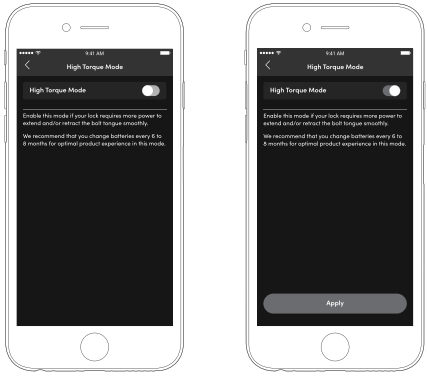

Changing Batteries

1 **Rotate the screw to <unlock>.**

Bottom View

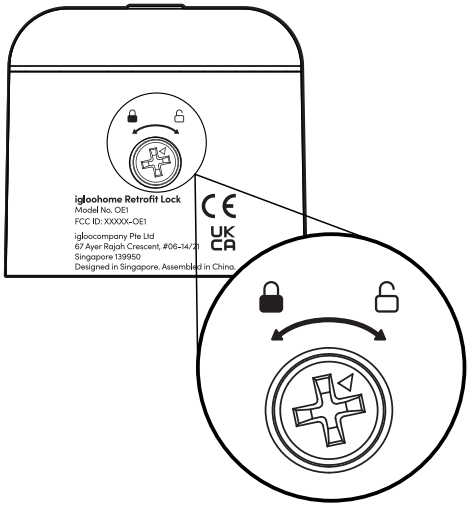

2 **Remove the battery cover.**

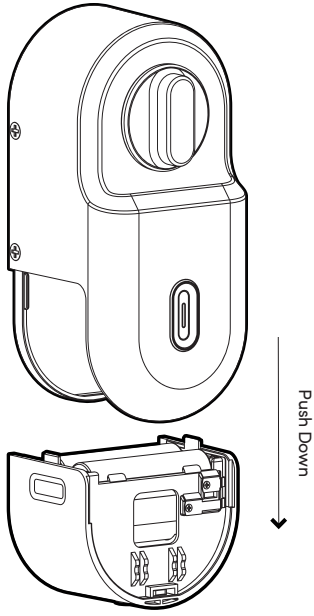

3 **Remove batteries.**

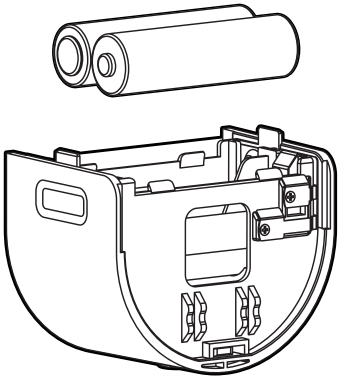

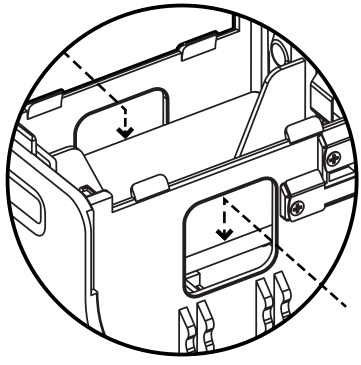

Holes at the side are designed to easily remove batteries.

3 Place new batteries in.

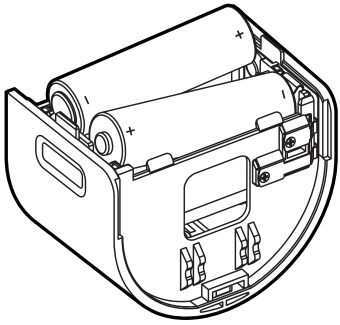

Round terminals - Positive,
Plate terminals - Negative

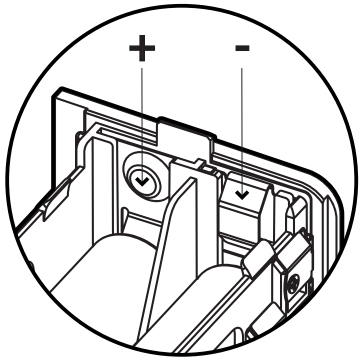

h Place battery cover back and turn the screw to <locked>.

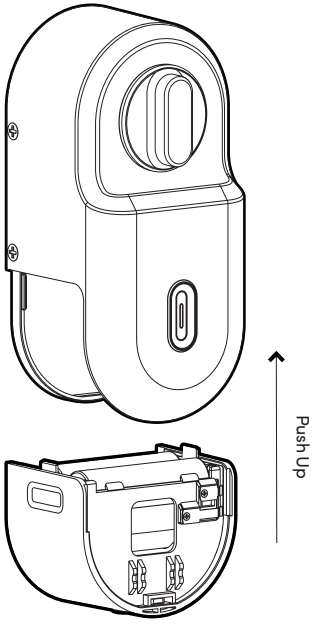

Bottom View

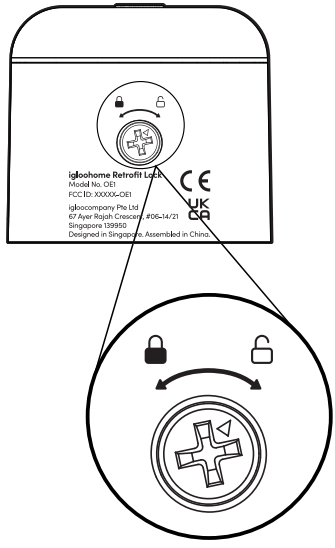

Connect with Airbnb

1 Connect with Airbnb

Connecting the lock with Airbnb automates the generation of PIN codes for your guests based on their confirmed reservations.

To activate it:

Step 1: Connect to your Airbnb listing

1. Under **[Account Settings]**, select **[Connect with Airbnb]**, then tap **[OK]**.

2. Under **[Reservations]**, click the **[Add]** icon to select a home to connect to.

3. Select Airbnb Listing and PIN Time to associate.

Note:
- Emails with PIN code will be sent to the guest between 1 to 48 hours before check-in time (configurable).
- PIN codes will only be valid between the check-in and check-out times.

Step 2: Change Check-in and Check-out time

Under **[Add and Manage]**, select **[Manage Properties]** followed by the listing to view or edit its details.

Notes:
- If the access mail has not been sent, changing your check-in/check-out time via the app modifies the start and end time of the PIN codes to be shared with your guest.
- If the access mail has been sent, changing these details will only affect the next reservation.
- Changing these details on the igloohome app does not update the check-in/check-out time on the listing on the Airbnb website.

2 Disconnect Airbnb

Should you prefer to generate PIN codes for your guests manually, you may disconnect your Airbnb listing from the igloohome.

1. Under **[Reservations]**, disconnect all the listings.

2. Under **[Account Settings]**, select **[Disconnect with Airbnb]**.

Should you wish to completely disconnect your Airbnb account from your igloohome account, make sure that all your Airbnb listings have been disconnected in the above step, then go to:

Airbnb Host Website > Connected Apps > igloohome to disconnect

Audio and LED Indications

Actions	Indications
Bluetooth Connection	LED Indicator flashes Blue
Successfully Unlocked	4 ascending tones and LED indicator flashes Green twice
Successfully Locked	1 long beep and LED Indicator flashes Green for 2 seconds
Low Battery Alert	3 descending tones
Obstruction Alarm	6 sets of 4 short beeps
Calibration complete	1 long beep and LED Indicator shows Green
Unpairing	4 descending beeps and LED Indicator flashes Blue
Hard Reset / Unpair	3 descending tones
Successful Paired	3 ascending tones

Troubleshoot

Lock does not power up.

- Check that the batteries are inserted in the correct orientation and that the battery cover is securely fastened.

Lock powers up but motor is weak.

- Check that the batteries are inserted in the correct orientation and that the battery cover is securely fastened.
- If issue persists, your door may be incompatible with the lock.

Lock wobbles when turning the mechanism.

- Ensure the mounting plate screws are aligned and tightened.

Lock still wobbles when turning mechanism after screws were tightened.

- Use the 3M double sided tape for extra stability.

The thumbturn is difficult to turn.

- Press the multi-function button and try to rotate.
- If clutch is not fully released, this might happen from time to time.
- Remove and re-install the back body.
- Perform calibration steps again.

Does the lock work with my door?

- Go through the compatibility guide.

How long will my lock last when the low battery alert appears?

- Approximately 2 months depending on the frequency of use.

How do I factory reset my lock?

- Remove battery compartment, press and hold the multi-function button for 10 seconds while re-inserting the battery compartment. Audio and LED alert will notify you of successful factory reset.

Lock does not behave as expected after calibration.

- Repeat calibration steps.

Compliance

This device complies with part 15 of the FCC Rules. Operation is subject to the following two conditions: (1) this device may not cause harmful interference, and (2) this device must accept any interference received, including interference that may cause undesired operation.

Any changes or modifications not expressly approved by the party responsible for compliance could void the user's authority to operate the equipment.

NOTE: This equipment has been tested and found to comply with the limits for a Class B digital device, pursuant to Part 15 of the FCC Rules. These limits are designed to provide reasonable protection against harmful interference in a residential installation. This equipment generates, uses and can radiate radio frequency energy and, if not installed and used in accordance with the instructions, may cause harmful interference to radio communications. However, there is no guarantee that interference will not occur in a particular installation.

If this equipment does cause harmful interference to radio or television reception, which can be determined by turning the equipment off and on, the user is encouraged to try to correct the interference by one or more of the following measures:

- Reorient or relocate the receiving antenna.
- Increase the separation between the equipment and receiver.
- Connect the equipment into an outlet on a circuit different from that to which the receiver is connected.
- Consult the dealer or an experienced radio/TV technician for help.

This equipment complies with FCC radiation exposure limits set forth for an uncontrolled environment. This equipment should be installed and operated with a minimum distance of 20 cm between the radiator and your body.

For enquiries go to:
igloohome.co/support